City Class F
TAVOLA 957000176/02
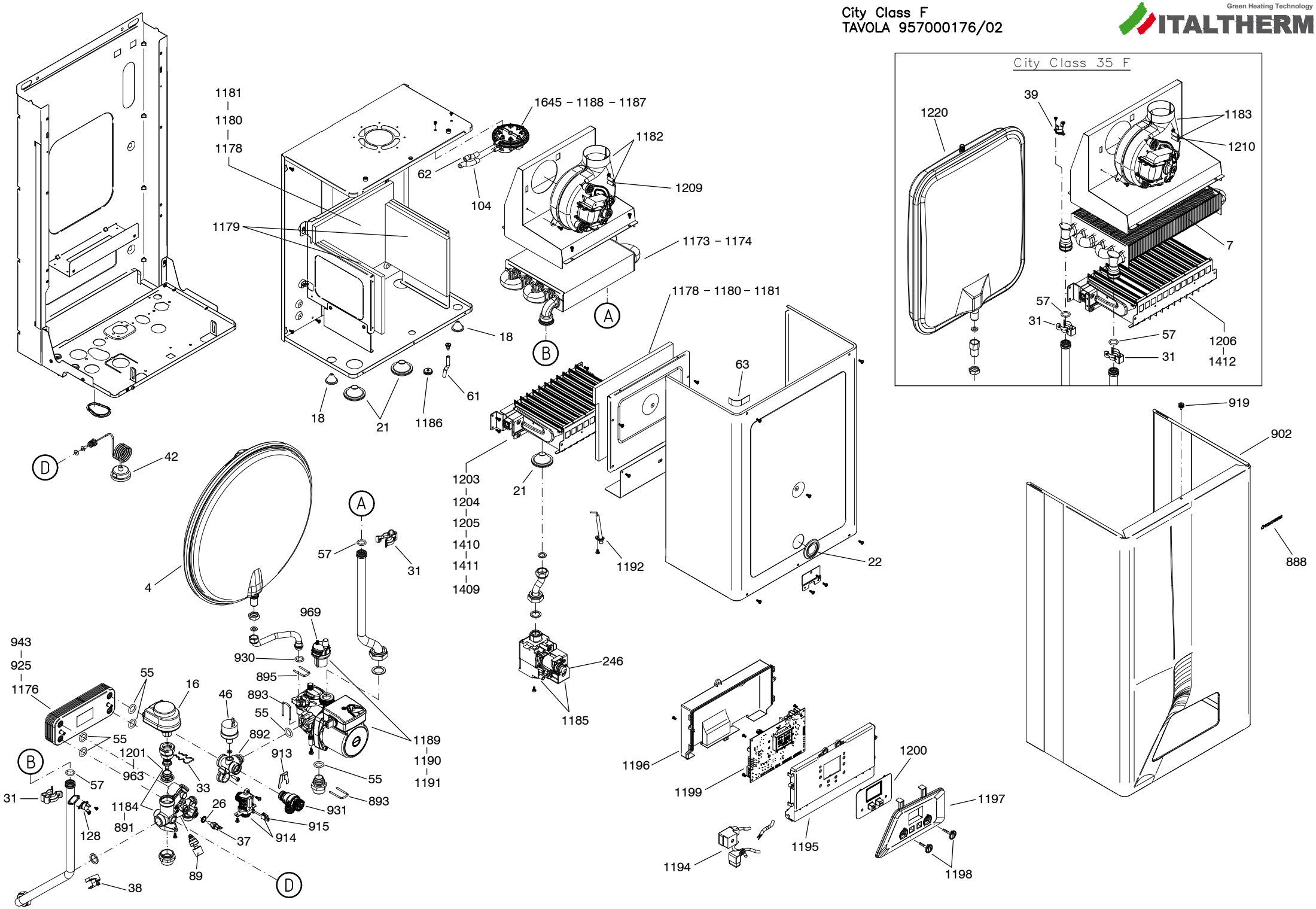
Green Heating Technology
ITALTHERM