| IMMERGAS | SERIAL NUMBER START OF SERIES | 14/11/05 | HERCULES CONDENSING 20 | 04D |
|---|---|---|---|---|
| | 1703202 | 3.013723 | | |

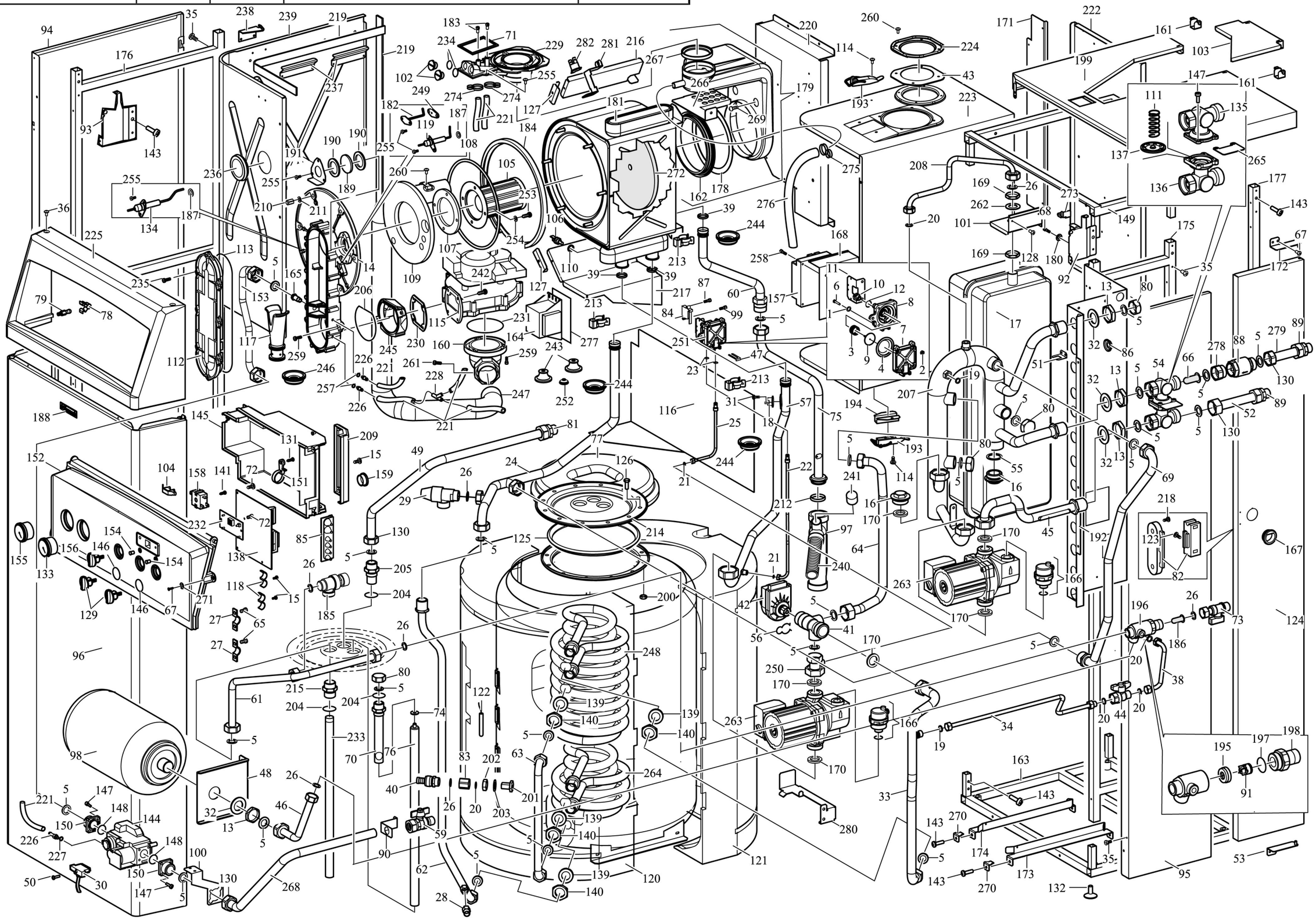

| N. | CODE | DESCRIPTION | SERIAL NUMBER START OF SERIES |
|---|---|---|---|
| - | 3.013062 | G20 gas conversion kit | |
| - | 3.013063 | G25 gas conversion kit | |
| - | 3.013064 | LPG gas conversion kit | |
| - | 3.013073 | Sealed chamber cover assembly | |
| - | 3.013097 | Control panel - complete | |
| - | 3.013652 | Set of leads for ignitor - sensor | |
| - | 3.014362 | Cylinder - complete | |
| - | 3.016257 | Control panel - complete | 2845793 |
| 1 | 1.0237 | 4.1x8x0.5 brass washer | |
| 2 | 1.1391 | M4 brass nut | |
| 3 | 1.2262 | Spring for plate | |
| 4 | 1.2264 | Diaphragm, pressure switch | |
| 5 | 3.A0120 | Set of 3/4" seals | |
| 6 | 1.2299 | M4x25 screw, brass, hex head | |
| 7 | 1.2300 | Housing, pressure switch, noryl | |
| 8 | 1.2301 | Cover, pressure switch, noryl | |
| 9 | 2.4848 | Pressure switch plate - complete | |
| 10 | 2.4849 | Pressure switch cover fitting - complete | |
| 11 | 2.5298 | Bracket for microswitch | |
| 12 | 1.2269 | 9.25x1.78 O-ring, nitrile, 70 sh | |
| 13 | 1.1260 | 3/4" F shallow brass nut | |
| 14 | 1.010589 | Gas manifold | |
| 15 | 1.1142 | 3.2x16 self-tapping screw, "Rapid Fix" | |
| 16 | 1.012594 | 1" M plug BSP | |
| 17 | 1.013402 | 12-litre expansion tank | |
| 18 | 1.010405 | 100°C clicson thermostat | |
| 19 | 3.A0184 | Set of 1/4" seals | |
| 20 | 3.A1124 | Set of 3/8" seals | |
| 21 | 3.A2313 | Set of 1/8" seals | |
| 22 | 1.014432 | D.5 pipe, negative pressure takeoff | |
| 23 | 1.2268 | 3.68x1.78 O-ring, nitrile, 70 sh | |
| 24 | 1.016051 | D.18 pipe, module return | |
| 25 | 1.016144 | D.5 pipe, positive pressure port | |
| 26 | 3.A1363 | Set of 1/2" seals | |
| 27 | 1.7908 | Steab cable clamp, black | |
| 28 | 1.4275 | Drain outlet with hose union | |
| 29 | 1.0180 | Safety valve, 3 bar 1/2"M | |
| 30 | 3.013598 | Additional gas valve connection | |
| 31 | 1.1656 | 3.5x6.4 self-tapping screw, crosshead, nickel-plated | |
| 32 | 1.1342 | Seal, 34x27x2 in flexoid | |
| 33 | 1.016146 | D.18 pipe, 3-way valve / boiler flow | |
| 34 | 1.012585 | D.8 pipe, stopcock - boiler flow | |
| 35 | 1.4557 | 4.2x9.5 self-tapping screw, crosshead, with shoulder | |
| 36 | 1.4066 | 3.5x9.5 self-tapping screw | |
| 38 | 1.014038 | D.8 pipe, cold inlet - filling | |
| 39 | 1.011141 | 17.86x2.62 O-ring, silicone, 70 sh | |
| 40 | 1.0113 | 1/2"M drain valve | |
| 41 | 3.012255 | 3-way valve assembly | |
| 42 | 1.014399 | 3-way valve motor | |
| 43 | 1.010334 | Seal, d.80 hole | |
| 44 | 1.018047 | 3/8" ball valve | |
| 45 | 1.016145 | D.18 pipe, heating system flow - pump | |
| 45 | 1.017605 | D.18 pipe, heating system flow - pump | 1794807 |
| 46 | 1.016411 | D.14 pipe, cold inlet assembly - expansion tank | |
| 47 | 2.4179 | Clip for pressure takeoff fitting | |
| 48 | 2.010929 | Angle bracket, hot water tank | |
| 49 | 1.016791 | D.14 pipe, hot outlet connection | |
| 50 | 1.010265 | M3x25 screw for gas valve connector | |
| 51 | 2.010935 | Angle bracket, heating system expansion tank | |
| 52 | 1.012592 | D.18 pipe, system supply | |
| 53 | 3.011507 | Bottom hinge | |
| 54 | 3.013639 | By-pass assembly | |
| 55 | 1.5409 | 28.42x2.62 O-ring, nitrile | |
| 56 | 1.014397 | Motor locking fork | |
| 57 | 1.014699 | D.18 pipe, module - pump | |
| 59 | 1.018094 | G1-2 twin-cone gas cock D.18 | |
| 60 | 1.016052 | D.18 stainless steel pipe, condensation outlet | |
| 60 | 1.017390 | D.18 stainless steel pipe, condensation outlet | 1739572 |
| 61 | 1.014042 | D.14 pipe,cold water inlet - boiler | |
| 62 | 1.014993 | D.18 pipe, cylinder return | |
| 63 | 1.012670 | D.18 pipe, coil connection | |
| 64 | 1.016624 | D.18 pipe, 3-way valve - manifold | |
| 65 | 1.7967 | 3.5x19 self-tapping screw, crosshead | |
| 66 | 1.016823 | Filter | |
| 67 | 1.2275 | 4.2x9.5 self-tapping screw, crosshead, flat point | |
| 68 | 1.016246 | M4x8 self-forming screw, crosshead | |
| 69 | 1.016974 | D.18 pipe, module return pipe manifold | |
| 70 | 1.5367 | Recirculating probe fitting | |
| 71 | 1.010340 | Gasket, pocket flange | |
| 72 | 1.2265 | 3.2x9.5 self-tapping screw, "Rapid fix" | |
| 73 | 1.013629 | Cock G1/2"M-F | |
| 74 | 1.5364 | Seal, 20x8x2 in frizite | |
| 75 | 1.017023 | D.18 pipe, condensation discharge | |
| 76 | 1.019472 | Magnesium anode | |
| 77 | 1.017122 | Insulation cover, boiler cylinder | |
| 78 | 1.014430 | Metal fastener, female | |
| 79 | 1.014429 | Metal fastener, male | |
| 80 | 1.0257 | 3/4" F brass plug | |
| 81 | 1.020058 | D.14-1/2"M Vabco fitting - complete | |
| 82 | 1.1174 | Magnet | |
| 83 | 1.5195 | 3/8"F-1/2"F reduction | |
| 84 | 1.6696 | Lx microswitch, white cable | |
| 85 | 1.010326 | Cable entry fitting, electrical connections | |
| 86 | 1.5778 | D.18 grommet, pvc | |
| 87 | 1.6984 | 2.9x9.5 self-tapping screw, crosshead, flat point | |
| 88 | 1.017453 | Return valve | |
| 88 | 1.019242 | Check valve, 3-4"F-M | 2845793 |
| 89 | 1.0375 | D.18-3/4"M Vabco fitting - complete | |
| 90 | 2.012105 | Angle bracket, gas inlet pipe | |
| 91 | 1.8251 | OV15 check valve | |
| 92 | 2.012091 | Rx angle bracket, control panel | |
| 93 | 2.010864 | Lx angle bracket, control panel | |
| 94 | 2.011012 | Lx casing | |
| 95 | 2.011013 | Rx casing | |
| 96 | 2.011014 | Front casing | |
| 97 | 1.011844 | Drain trap, plastic | |
| 98 | 1.013239 | 5-litre hot water expansion tank | |
| 99 | 1.6091 | 2.9x13 self-tapping screw, crosshead, flat point | |
| 100 | 2.011171 | Mounting bracket, valve | |
| 101 | 2.011972 | Angle bracket, expansion tank | |
| 102 | 1.010430 | Plug for pocket flange | |
| 103 | 2.011488 | Top casing, rear | |
| 104 | 1.013908 | Earth terminal | |
| 105 | 1.019622 | Burner | |
| 106 | 1.021762 | NTC fast immersion probe | |
| 107 | 1.010741 | Seal, ceramic fibre, burner | |
| 108 | 1.011132 | Cord packing | |
| 109 | 1.014732 | Ceramic fibre panel, cover | |
| 110 | 1.012711 | Seal, self-centring | |
| 111 | 1.013721 | By-pass spring | |
| 112 | 1.010662 | Cover, gas manifold | |
| 113 | 1.011864 | 202.87x2.62 O-ring, red silicone | |
| 114 | 1.011114 | 3.9x9.5 self-tapping screw, crosshead | |
| 115 | 1.010659 | Fan, MVL RG130 | |
| 116 | 2.011920 | Rear closing plate | |
| 117 | 1.010918 | Venturi | |
| 118 | 1.1705 | Two cable bracket | |
| 119 | 3.013626 | Ignitor, twin-row | |
| 120 | 1.015586 | Front shell | |
| 121 | 1.015587 | Rear cladding | |
| 122 | 1.016053 | Cylinder probe | |
| 123 | 1.1868 | 2.2x13 self-tapping screw, crosshead, nickel-plated | |
| 124 | 3.012567 | Casing flap assembly | |
| 125 | 1.1759 | Shaped cylinder seal | |
| 126 | 1.1760 | M8x22 screw, hex head | |
| 127 | 2.012600 | Bracket, module fixing | |
| 128 | 1.2402 | 3.9x6.5 self-tapping screw, crosshead, flat point | |
| 129 | 1.013340 | Trimmer adjustment knob | |
| 130 | 1.1356 | 3/4" F nut, flanged end pipe, d.18 | |
| 131 | 1.4139 | 3.9x13 self-tapping screw, crosshead | |
| 132 | 1.013708 | Plastic foot, frame | |
| 133 | 1.015806 | Thermometer | |
| 134 | 1.013961 | Ignitor sensor | |
| 135 | nfs | Lx housing, by-pass | |
| 136 | nfs | Rx housing, by-pass | |
| 137 | 1.4407 | By-pass diaphragm, noryl | |
| 138 | 1.015510 | Modulating control card | |
| 139 | 1.1524 | Seal, 36x27x2 in frizite | |
| 140 | 2.3123 | 3/4'F locknut for coil | |
| 141 | 1.8864 | 3.2x9.5 self-tapping screw, "Rapid fix", cone point | |
| 143 | 1.0143 | M6x15 screw, crosshead, swageform | |
| 144 | 1.011846 | Gas valve, VK4115 | |
| 145 | 1.012686 | Back cover, control panel | |
| 146 | 1.6947 | 17.17x1.78 O-ring, nitrile, 70 sh | |
| 147 | 1.2369 | M4x12 screw, crosshead | |
| 148 | 1.2343 | 21.89x2.62 O-ring, nitrile, 70 sh | |
| 149 | 2.011973 | Top frame | |
| 150 | 1.2311 | Flange, gas valve | |
| 151 | 1.4072 | Clip with clamp screw hole | |
| 152 | 1.016115 | Bezel, control panel | |
| 153 | 1.016050 | D.14 pipe, gas valve - manifold | |
| 154 | 1.010365 | LED lens | |
| 155 | 1.015807 | Pressure gauge | |
| 156 | 1.010263 | Knob, main switch | |
| 157 | 1.011978 | Control unit | |
| 158 | 1.010564 | Switch, three positions+reset | |
| 159 | 1.011968 | Plug, access hole | |
| 160 | 1.011752 | Flange, pipe fixing fan | |
| 161 | 2.010930 | Rear angle bracket, top casing | |
| 162 | 1.019698 | Flue outlet lip seal | |
| 163 | 2.010448 | Bottom frame | |
| 164 | 1.012477 | Transformer | |
| 165 | 1.011848 | G20 gas nozzle | |
| 165 | 1.012952 | G25 gas nozzle | |
| 165 | 1.012953 | LPG gas nozzle | |
| 166 | 1.017563 | Automatic vent valve | |
| 167 | 1.012568 | Abs handle | |
| 168 | 2.011008 | Casing protecting control unit | |
| 169 | 1.1269 | 1-2" F shallow brass nut | |
| 170 | 3.A1343 | Set of 1" seals | |
| 171 | 2.010610 | Lx angle bracket, chamber back | |
| 172 | 3.011506 | Top hinge assembly | |
| 173 | 2.010593 | Rx guide bracket, boiler cylinder | |
| 174 | 2.010594 | Lx guide bracket, boiler cylinder | |
| 175 | 2.012324 | Rx frame | |
| 176 | 2.011582 | Lx frame | |
| 177 | 2.011583 | Frame rear member | |
| 178 | 2.010792 | Seal ring | |
| 179 | 1.015902 | Flue outlet | |
| 179 | 3.015657 | Flue outlet assembly | 1739572 |
| 180 | 1.4246 | M4 lock washer | |
| 181 | 1.016255 | Condensation module | |
| 182 | 1.016779 | Dummy ignition electrode | |
| 183 | 1.011057 | Screw, pressure test point | |
| 184 | 1.014785 | Gas manifold seal | |
| 185 | 1.7051 | Safety valve, 8 bar | |
| 186 | 1.8403 | Mesh filter, stainless | |
| 187 | 1.012028 | 9.19x2.62 O-ring, red silicone | |
| 188 | 1.012874 | "Immergas" nameplate, plastic | |
| 189 | 1.013368 | Ceramic lens, d.40 | |
| 190 | 1.017282 | Seal, module inspection hole | |
| 191 | 2.010177 | Flange, module cover inspection hole | |
| 192 | 2.011584 | Pipes bulkhead | |
| 192 | 2.012094 | Pipes bulkhead | 1794807 |
| 193 | 1.2446 | Draw pull catch, G type | |
| 194 | 2.4261 | Bracket, sealed chamber cover | |
| 195 | 1.015661 | 30 litre limiter | |
| 196 | 3.013373 | Cold inlet valve asembly | |
| 197 | 1.1709 | 23.47x2.62 O-ring, nitrile, 70 sh | |
| 198 | nfs | Filter holder fitting | |
| 199 | 3.013901 | Top casing, front | |
| 200 | 1.1116 | M8 nut | |
| 201 | 1.5057 | Fitting for drain cock | |
| 202 | 1.5058 | Locknut, drain fitting | |
| 203 | 1.5207 | Seal, 17x24x2 klingersil | |
| 204 | 1.5066 | 23.39x3.53 O-ring, nitrile, 70 sh | |
| 205 | 1.5062 | Cylinder fitting for hot outlet | |
| 206 | 1.019181 | 72.69x2.62 O-ring, red silicone | |
| 207 | 1.017972 | D.42 pipe, manifold | |
| 208 | 1.014551 | D.10 pipe, expansion tank | |
| 209 | 1.016935 | Connection housing cover | |
| 210 | 1.018592 | M6 cap nut | |
| 211 | 2.010982 | 6x12x1 aluminium washer | |
| 212 | 1.013421 | 25.81x3.53 O-ring, viton | |
| 213 | 1.010371 | Clip, exchanger pipes | |
| 214 | 2.4440 | Cylinder cover | |
| 215 | 1.013250 | Fitting for cold inlet | |
| 216 | 2.011276 | Bracket, module fixing | |
| 217 | 2.011641 | Module mount bracket | |
| 218 | 1.1175 | 3.2x13 self-tapping screw, "Rapid fix" | |
| 219 | 1.013154 | Adhesive foam strip, d.15x3 | |
| 220 | 2.011273 | Module mount | |
| 220 | 2.012511 | Module mount | 1739572 |
| 221 | 1.2363 | 4x8 silicone tube | |
| 222 | 2.011272 | Back panel, sealed chamber | |
| 222 | 2.011643 | Back panel, sealed chamber | 1739572 |
| 223 | 2.011929 | Side wall, sealed chamber | |
| 224 | 2.010055 | Cover, d.80 hole | |
| 225 | 1.014033 | Control panel surround | |
| 226 | 1.2364 | Brass fan pressure port | |
| 227 | 1.6413 | 10x5x1 washer, plastic | |
| 228 | 1.6221 | Hose union for tubes in silicone | |
| 229 | 1.013217 | Pocket flange | |
| 230 | 1.5754 | Seal, burner | |
| 231 | 1.5539 | 63x3 O-ring, nitrile, 70 sh | |
| 232 | 1.013094 | Display card | |
| 233 | 1.013480 | Probe pipe | |
| 234 | 1.6922 | 10.77x2.62 O-ring, nitrile, 70 sh | |
| 235 | 1.0151 | M5x12 screw, crosshead | |
| 236 | 3.012705 | Inspection hole glass assembly with seal | |
| 237 | 2.4270 | Angle bracket, foam strip | |
| 238 | 2.4271 | Bracket, Rx | |
| 238 | 2.4272 | Bracket, Lx | |
| 239 | 2.011279 | Cover, sealed chamber | |
| 240 | 1.015290 | L.600 pipe | |
| 241 | 1.023190 | Air trap plug | |
| 242 | 1.010803 | M5x12 hex socket screw | |
| 243 | 1.011131 | D.8 grommet, pipe | |
| 244 | 1.6600 | Grommet, silicone, d.16 | |
| 245 | 1.015904 | Fan connecting flange | |
| 246 | 1.011362 | D.12 pipe grommet in silicone | |
| 247 | 1.016084 | D.40 pipe, air intake | |
| 248 | 3.012829 | Coil assembly | |
| 249 | 1.016795 | Electrode seal | |
| 250 | 3.012238 | 3-way pump connection fitting assembly | |
| 251 | 3.5312 | Differential pressure switch assembly - complete | |
| 252 | 1.6406 | Grommet, silicone, d.5 | |
| 253 | 1.8372 | M5x10 screw, crosshead, stainless steel | |
| 254 | 1.012468 | M5 stainless steel split washer | |
| 255 | 1.2170 | M4x8 screw, crosshead | |
| 257 | 1.016869 | Annealed copper washer 10x5x1 | |
| 258 | 1.017229 | 2.9x22 self-tapping screw, dome head | |
| 259 | 1.011914 | M6x16 hex socket screw | |
| 260 | 1.0110 | 4.2x13 self-tapping screw, crosshead, flat point | |
| 261 | 1.013219 | 4.2x6.5 self-tapping screw, crosshead, cone point | |
| 262 | 1.0278 | Seal, 28x21x2 in flexoid | |
| 263 | 1.016414 | Circulating pump 63-15 | |
| 264 | 3.012830 | Coil assembly, solar panels | |
| 265 | 2.010972 | Position reference plate, by-pass valve | |
| 266 | 2.011632 | Hood hanger bracket | |
| 267 | 1.021483 | Hood seal, silicone | |
| 268 | 1.016122 | D.18 pipe, gas connection | |
| 269 | 1.017495 | 4.2x19 self-tapping screw, crosshead, with shoulder | 1739572 |
| 270 | 2.011722 | Bracket, cylinder hanger | |
| 271 | 1.8599 | 4.3x12 washer | |
| 272 | 1.018387 | Insulating panel, rear | |
| 273 | 2.012092 | Bracket,control panel clip | |
| 274 | 1.010500 | Spring pipe clamp for silicone pipe | |
| 275 | 1.016967 | Spring pipe clamp for silicone pipe | |
| 276 | 1.019744 | 14x10 silicone tube | |
| 277 | 1.022208 | Adhesive foam mat | |
| 278 | 1.018817 | 3/4' M - F extension | 2845793 |
| 279 | 1.012592 | D.18 pipe, system supply | |
| 279 | 1.019284 | D.18 pipe, system return conn. | 2845793 |
| 280 | 2.011881 | Bracket, circulating pump mount | 2845793 |
| 281 | 2.012510 | Bracket, flue outlet clicson mount | 2845793 |
| 282 | 1.012067 | 100°C clicson thermostat | 2845793 |